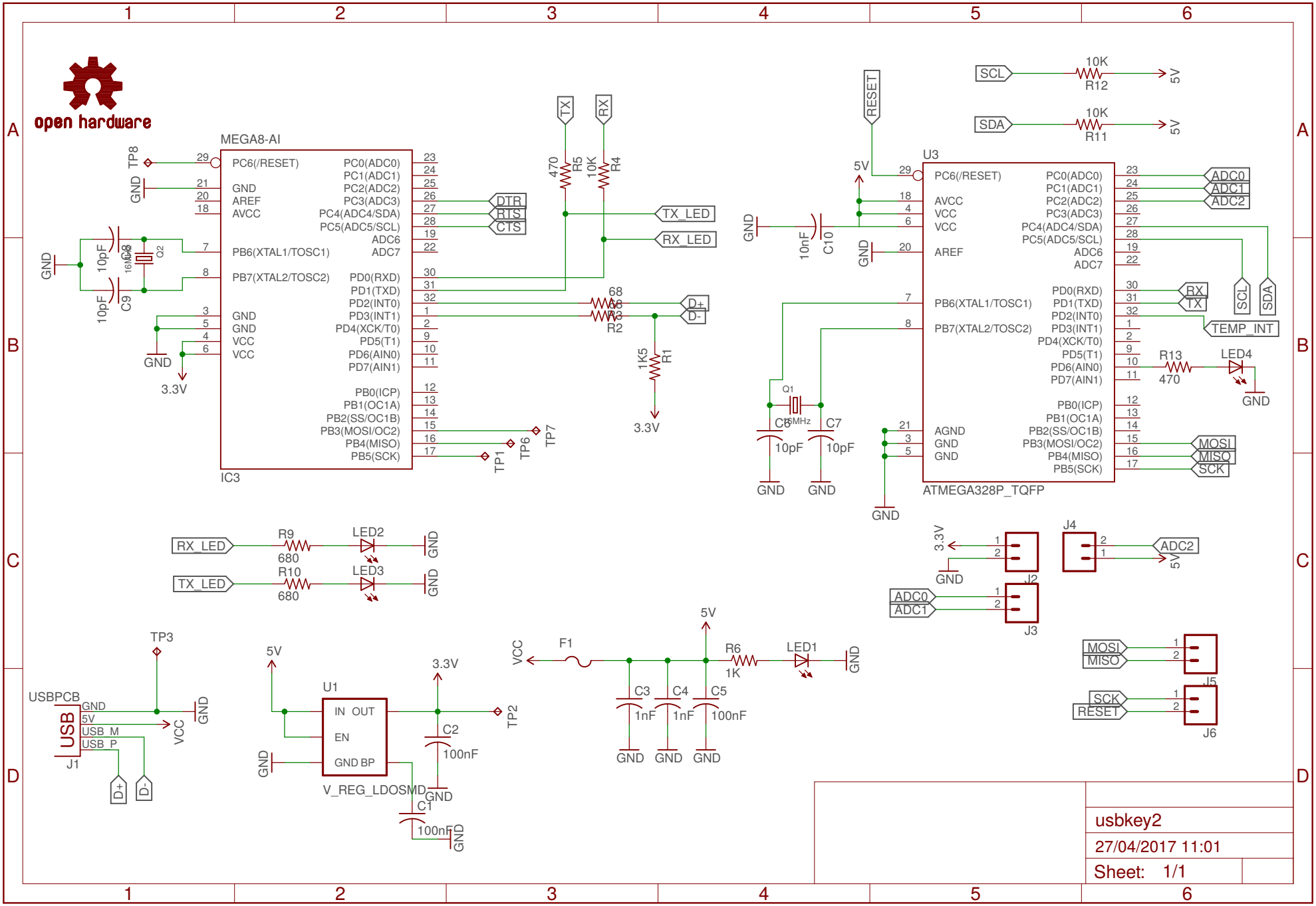
open hardware
MEGA8-AI
IC3
PC6(/RESET)
GND
AREF
AVCC
PB6(XTAL1/TOSC1)
PB7(XTAL2/TOSC2)
GND
GND
VCC
VCC
PC0(ADC0)
PC1(ADC1)
PC2(ADC2)
PC3(ADC3)
PC4(ADC4/SDA)
PC5(ADC5/SCL)
ADC6
ADC7
PD0(RXD)
PD1(TXD)
PD2(INT0)
PD3(INT1)
PD4(XCK/T0)
PD5(T1)
PD6(AIN0)
PD7(AIN1)
PB0(ICP)
PB1(OC1A)
PB2(SS/OC1B)
PB3(MOSI/OC2)
PB4(MISO)
PB5(SCK)
DTR
RTS
CTS
TX
RX
TX_LED
RX_LED
D+
D-
TP1
TP6
TP7
TP8
3.3V
U3
ATMEGA328P_TQFP
AGND
RESET
5V
SCL
SDA
ADC0
ADC1
ADC2
TEMP_INT
MOSI
MISO
SCK
LED4
R13
470
R12
10K
R11
10K
R5
470
R4
10K
R3
68
R2
68
R1
1K5
C10
10nF
C6
10pF
C7
10pF
Q1
16MHz
Q2
16MHz
C8
10pF
C9
10pF
RX_LED
R9
680
LED2
TX_LED
R10
680
LED3
J4
J2
J3
J5
J6
USBPCB
USB
J1
GND
5V
USB_M
USB_P
VCC
D+
D-
TP3
U1
IN OUT
EN
GND BP
V_REG_LDOSMD
C1
100nF
C2
100nF
TP2
F1
C3
1nF
C4
1nF
C5
100nF
R6
1K
LED1
usbkey2
27/04/2017 11:01
Sheet: 1/1